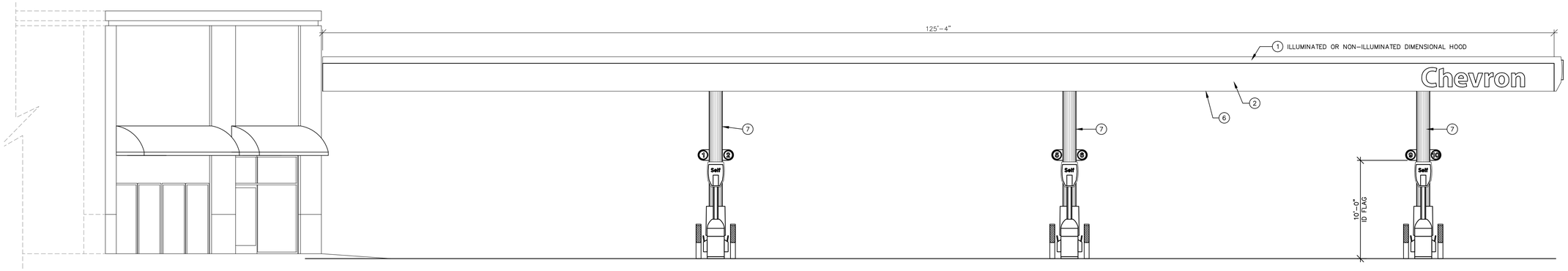

SOUTHEAST ELEVATION - FUEL CANOPY

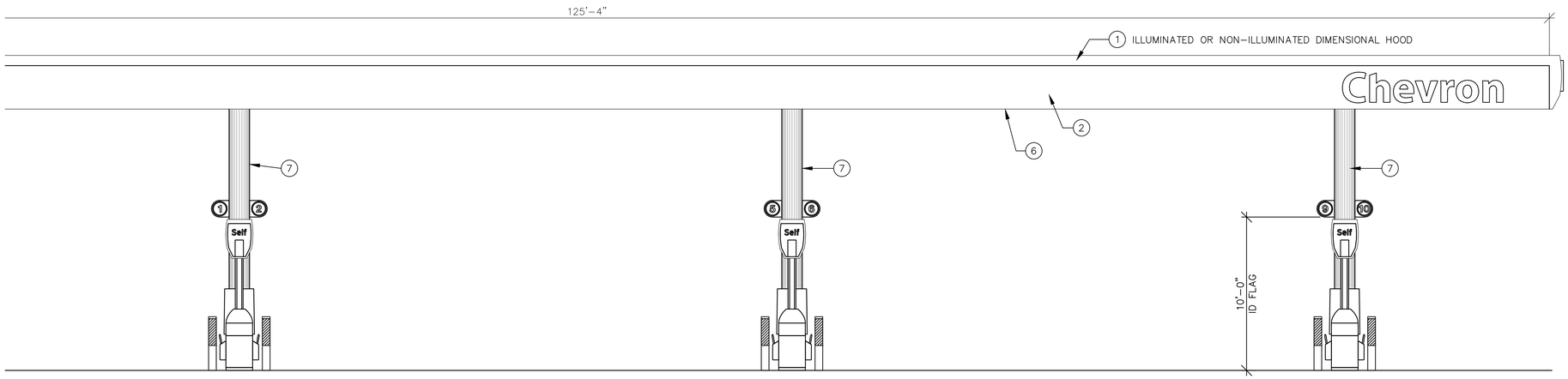

SOUTHEAST ELEVATION - FUEL CANOPY

COLOR LEGEND				
COLOR	PMS	FILM	FINISHES	
PEARL WHITE	N/A	3M REFLECTIVE WHITE 680-10	JONES BLAIR HIGH GLOSS	1
BLUE	PMS 2935c	3M BRISTOL BLUE	N/A	2
LIGHT GRAY	PMS 428c	N/A	PPGGY-450	3
DARK GRAY	PMS 431c	N/A	PPG GY-210	4
RED	PMS 186c	N/A	N/A	5
WHITE		N/A	PPG WH-835	6
SILVER	PMS 429c	N/A	JONES BLAIR #36	7
ALL PAINT TO BE V.O.C. COMPLIANT URETHANE				

0 2 4 8

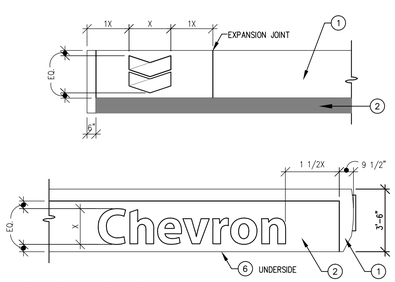

CANOPY SIGNAGE

SCALE 1/4"=1'-0"

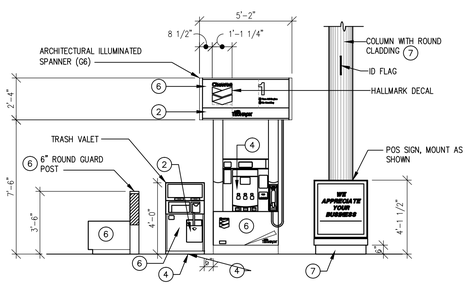

G6 SPANNER

SCALE 1/4"=1'-0"

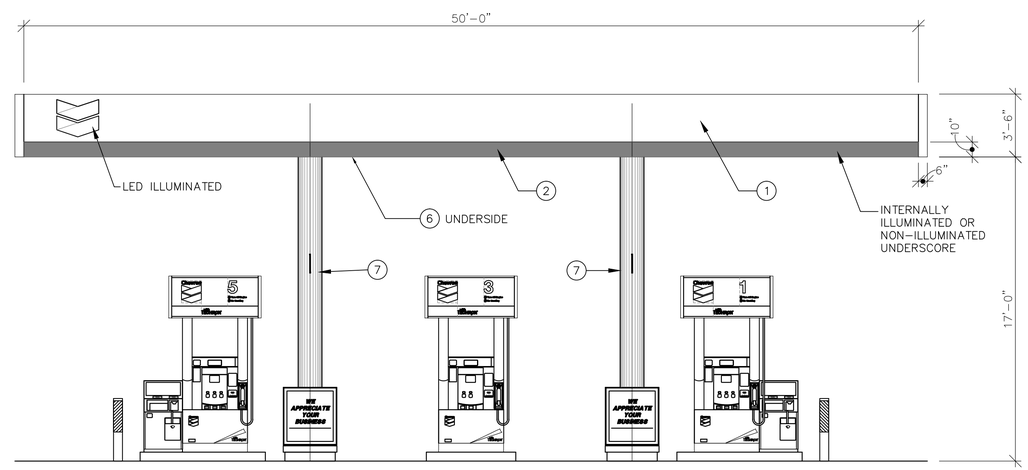

NORTHEAST ELEVATION - FUEL CANOPY

0 2 4 8

No.	Date	By	Ckd.	Appr.	Revision

Title: FUEL CANOPY ELEVATIONS
WOODBURN FAST SERVE
2990 NEWBURG HWY
WOODBURN, OREGON 97071

For: WOODBURN FAST SERVE
2990 NEWBURG HWY
SR 214 @ LAWSON STREET
WOODBURN, OREGON 97071

REGISTERED PROFESSIONAL ENGINEER 15803PE
OREGON MAR. 17, 1992 HAL P. GRUBB
EXPIRES:

Scale: Horizontal 1/4"=1'-0" Vertical

Designed cjp
Drawn cjp
Checked —
Approved —
Date 10.23.14

18215 72ND AVENUE SOUTH
KENT, WA 98032
(425)251-6222
(425)251-8782 FAX
CIVIL ENGINEERING, LAND PLANNING, SURVEYING, ENVIRONMENTAL SERVICES
BARGHAUSEN CONSULTING ENGINEERS, INC.

Job Number 16489

Sheet CA.1 of