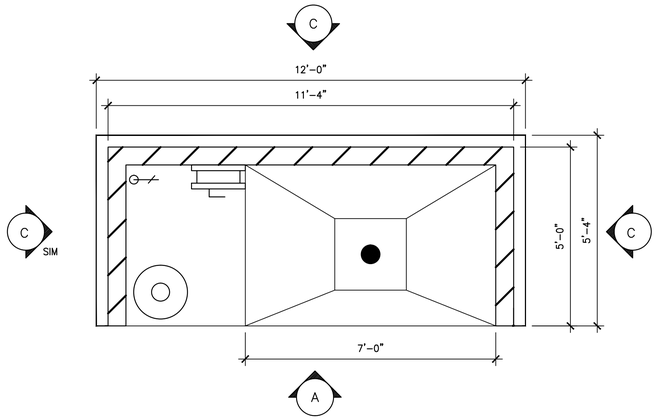

A **RV Dump Station**

SCALE: 1/2" = 1'-0"

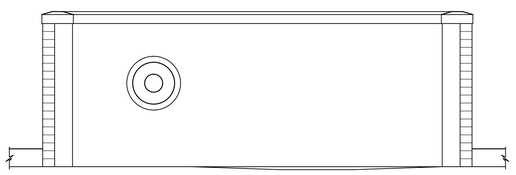

A **South Elevation**

SCALE: 1/2" = 1'-0"

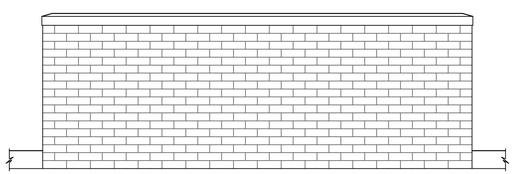

C **North Elevation**

SCALE: 1/2" = 1'-0"

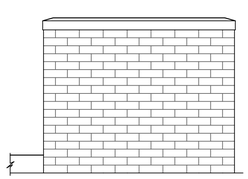

C **West Elevation**

SCALE: 1/2" = 1'-0"

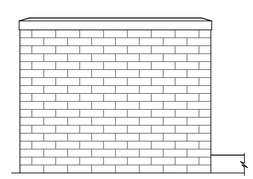

C **East Elevation**

SCALE: 1/2" = 1'-0"

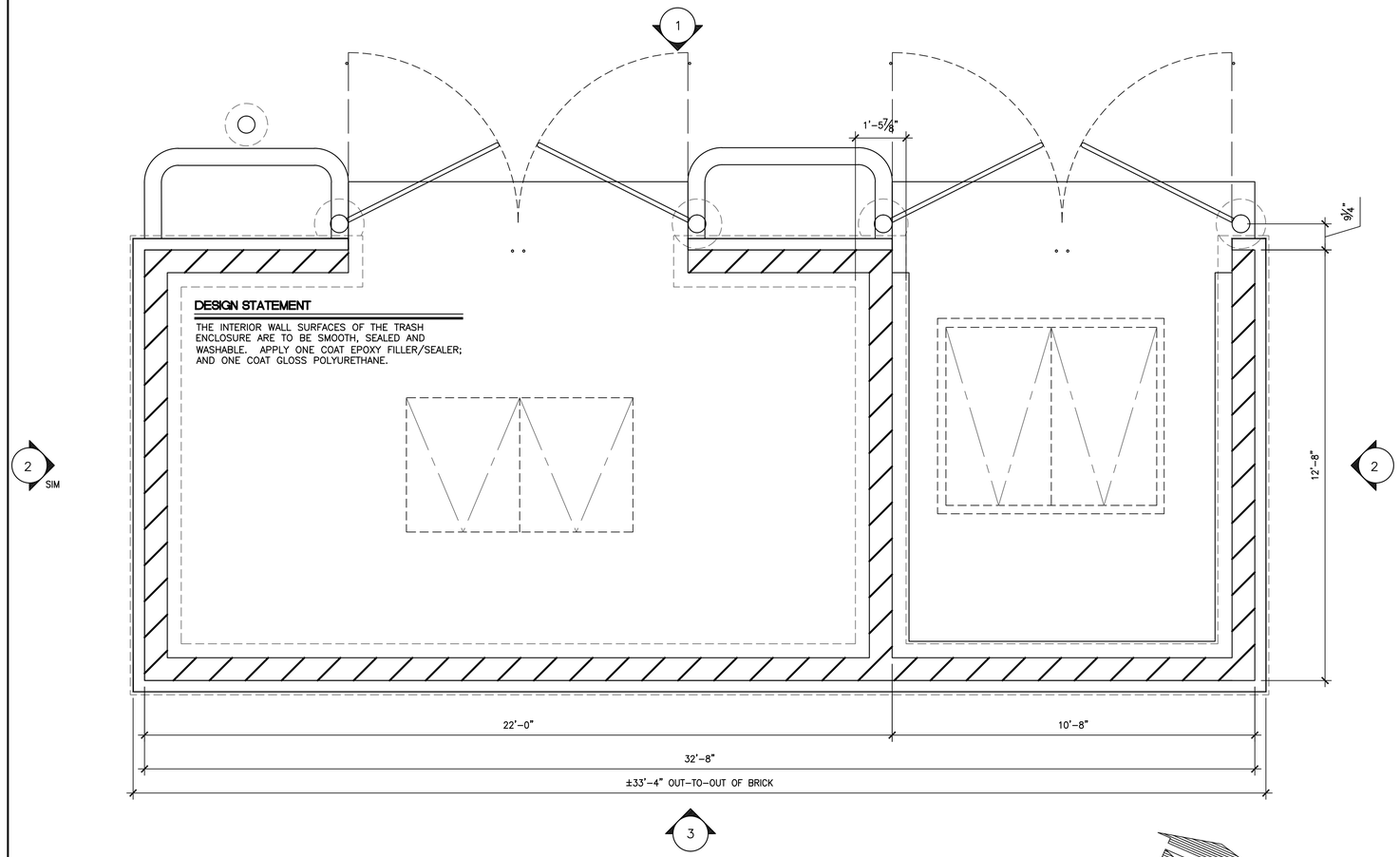

1 **Trash/Recycle Enclosure Plan**

SCALE: 1/2" = 1'-0"

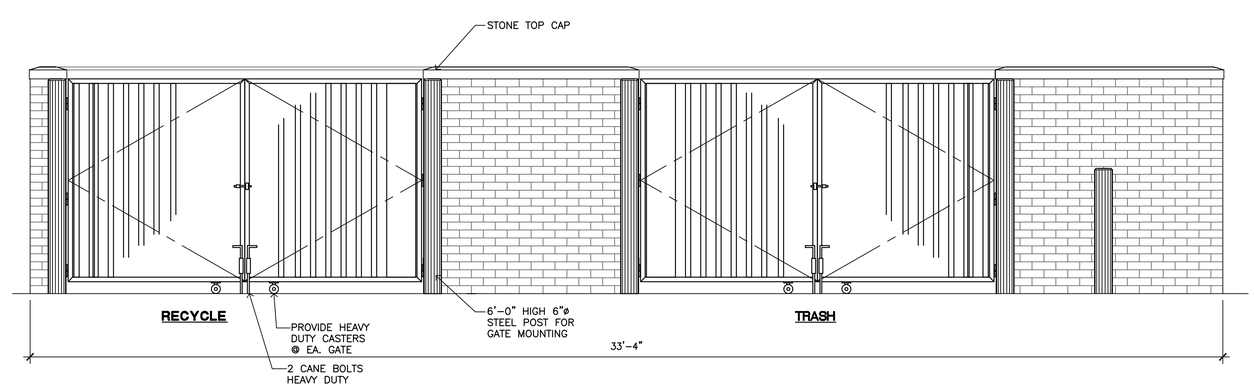

1 **North Elevation**

SCALE: 1/2" = 1'-0"

No.	Date	By	Ckd.	Appr.	Revision
1					

Title: TRASH/RECYCLE ENCLOSURE/RV DUMP
JACKSONS STORE No. 508
5025 NE 101st AVENUE
PORTLAND, OREGON

For: WOODBURN FAST SERVE
2990 NEWBERG HWY
SR 214 • LAWSON STREET
WOODBURN, OREGON 97071

REGISTERED PROFESSIONAL ENGINEER 15803PE OREGON MAR. 17, 1992 HAL P. GRUBB

EXPIRES:

Scale: Horizontal VARIES Vertical –

Designed cjp Drawn cjp Checked — Approved — Date 01.30.14

BARGHAUSEN CONSULTING ENGINEERS, INC.
18215 72ND AVENUE SOUTH
KENT, WA 98032
(425)251-6222
(425)251-8782 FAX
CIVIL ENGINEERING, LAND PLANNING, SURVEYING, ENVIRONMENTAL SERVICES

Job Number 16489

Sheet SD.1 of ___

File:P:\16000s\16489\architecture\16489 SD.1-SD.3.dwg Date/Time:11/17/2014 6:05 PM Scale:1"=0" = 1'-0" CPINNER Xref: ----